Simple Iambic Keyer, 3V
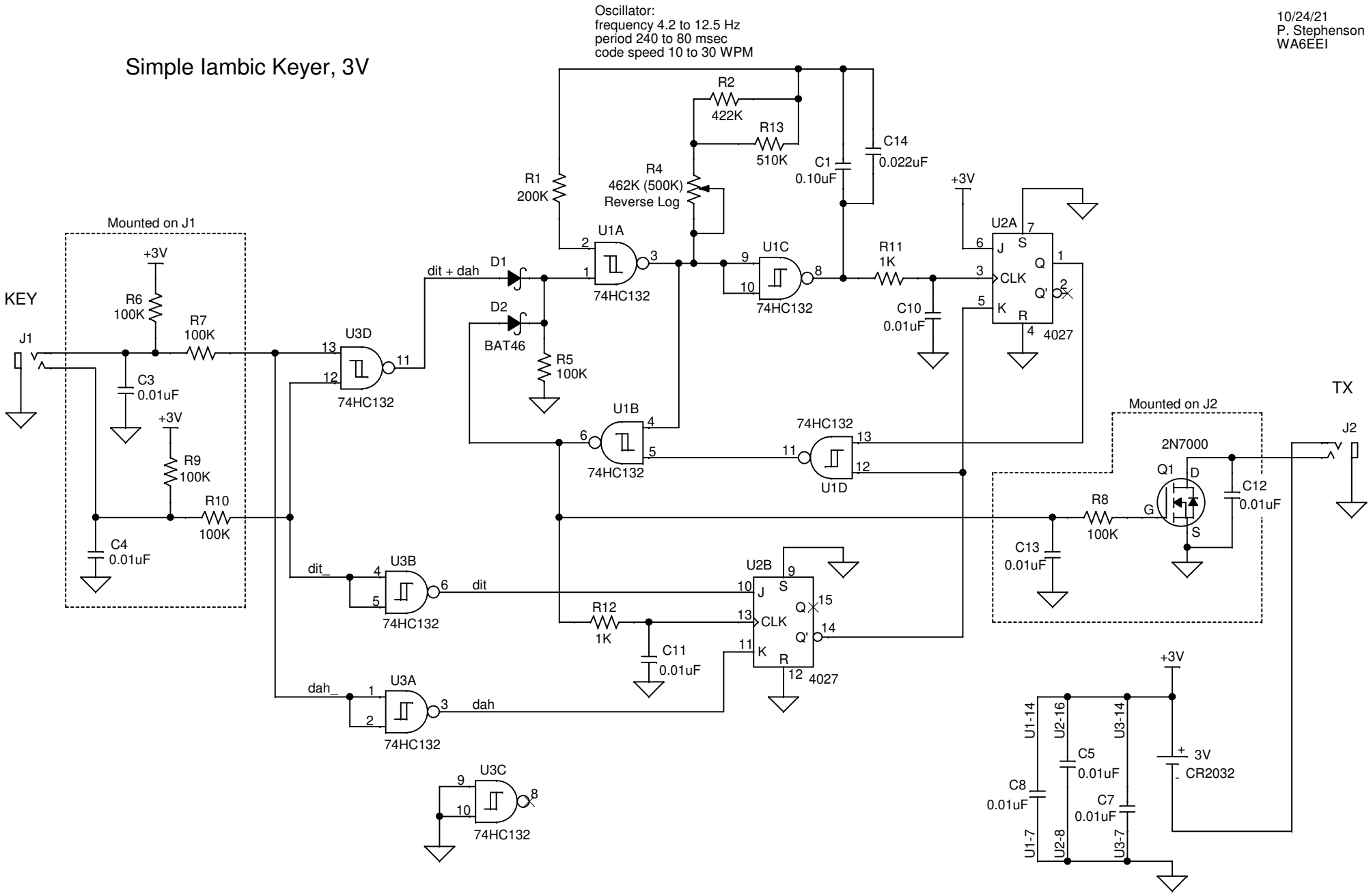
10/24/21
P. Stephenson
WA6EEI